price®

Submittal Sheet

PDDR-FR PERFORATED DIFFUSER, DUCTED RETURN, FIRE RATED ASSEMBLY

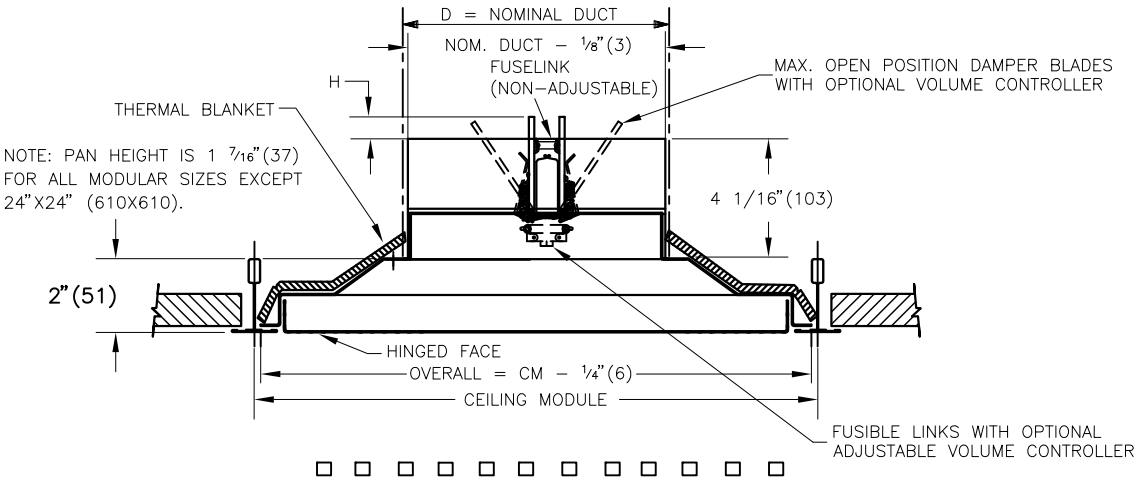

		CEILING MODULE (CM)	D SQUARE DUCT 6x6 (152x152)	8x8 (203x203)	10x10 (254x254)	12x12 (305x305)	14x14 (356x356)	15x15 (381x381)	D ROUND DUCT 6" (152)	8" (203)	10" (254)	12" (305)	14" (356)	15" (381)
☐	IMPERIAL	12x12 (305x305)	•						•					
☐	IMPERIAL	20x20 (505x508)	•	•	•				•	•	•			
☒	IMPERIAL	24x24 (610x610)	•	•	•	•	•	•	•	•	•	•	•	•
☐	METRIC	300x300	•						•					
☐	METRIC	500x500	•	•	•				•	•	•			
☐	METRIC	600x600	•	•	•	•	•	•	•	•	•	•	•	•

ROUND NECK	
NOM. DUCT	H
6 (152)	1 (25)
8 (203)	2 (51)
10 (254)	3 (76)
12 (305)	4 (102)
14 (356)	5 (127)
15 (381)	5½ (140)

SQUARE NECK	
NOM. DUCT	H
6 X 6 (152 X 152)	2 (51)
8 X 8 (203 X 203)	3 (76)
10 X 10 (254 X 254)	4 (102)
12 X 12 (305 X 305)	5 (127)
14 X 14 (356 X 356)	6 (152)
15 X 15 (381 X 381)	6½ (165)

MATERIAL:
- STEEL CONSTRUCTION
- CEILING RADIATION DAMPER: BUTTERFLY TYPE.
- THERMAL BLANKET: NON ASBESTOS

FINISH:
- ☒ B12 WHITE (OPTIONAL FINISHES AVAILABLE)

OPTION:
- ☐ ADJUSTABLE VOLUME CONTROLLER (ALLEN KEY ADJUSTABLE)
- ☒ 165°F (74°C) FUSIBLE LINK (STANDARD)
- ☐ 212°F (100°C) FUSIBLE LINK

NOTE:
- FIRE RATED 3 HOUR.
- UL CLASSIFIED FIRE RATED CEILING DIFFUSER ASSEMBLY. LISTED IN UNDERWRITERS LABORATORIES FIRE RESISTANCE DIRECTORY.
- ULC CLASSIFIED FIRE RATED CEILING DIFFUSER ASSEMBLY. LISTED IN UNDERWRITERS OF CANADA LABORATORIES LIST OF EQUIPMENT AND MATERIALS.
- DUCT: STEEL OR FLEXIBLE DUCT CONNECTIONS. AS PER FIRE RATED DESIGN REQUIREMENTS.
- INSTALLATION INSTRUCTIONS: SEE SUBMITTAL 228791
- FIRE RATED DIFFUSERS ARE TO BE INSTALLED IN FIRE RATED T–BAR APPLICATIONS ONLY.

CLASSIFIED C UL US

ALL METRIC DIMENSIONS ( ) ARE SOFT CONVERTED. IMPERIAL DIMENSIONS ARE CONVERTED TO METRIC AND ROUNDED TO THE NEAREST MILLIMETER.

PROJECT: ODD STOCK		price®	
ENGINEER:		MJ	**PDDR-FR** PERFORATED DIFFUSER DUCTED RETURN FIRE RATED
CUSTOMER:		228728	
SUBMITTAL DATE: 2/3/2021	**SPEC. SYMBOL:** PDDR-FR/I/12/3/24/24	2015/03/31	

© Copyright PRICE INDUSTRIES 2015

REV C

price®

Submittal Sheet

PDDR-FR PLENUM RETURN PERFORATED FIRE RATED DIFFUSER ASSEMBLY

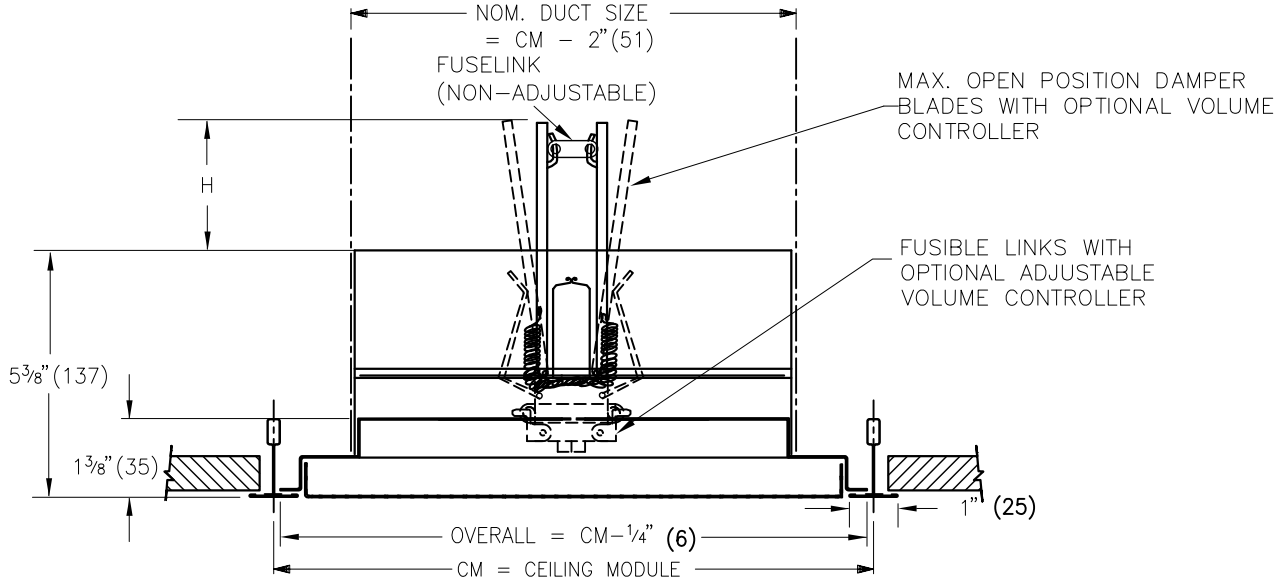

		CEILING MODULE (CM)	NOM. DUCT SIZE (SQUARE)
☐	IMPERIAL	12x12 (305x305)	10x10 (245x245)
☐	IMPERIAL	24x12 (610x305)	22x10 (559x254)
☐	IMPERIAL	16x16 (406x406)	14x14 (356x356)
☐	IMPERIAL	20x20 (508x508)	18x18 (547x547)
☒	IMPERIAL	24x24 (610x610)	22x22 (559x559)
☐	METRIC	300 x 300	249x249
☐	METRIC	600 x 300	549x549
☐	METRIC	400 x 400	349x349
☐	METRIC	500 x 500	449x449
☐	METRIC	600 x 600	549x549

SQUARE NECK	
NOM. DUCT	H
10 X 10 (254 X 254)	4 (102)
14 X 14 (356 X 356)	6 (152)
18 X 18 (547 X 547)	8 (203)
22 X 10 (559 X 254)	4 (102)
22 X 22 (559 X 559)	10 (254)

NOTE:

- FIRE RATED 3 HOUR.
- UL CLASSIFIED FIRE RATED CEILING DIFFUSER ASSEMBLY. LISTED IN UNDERWRITERS LABORATORIES FIRE RESISTANCE DIRECTORY.
- ULC CLASSIFIED FIRE RATED CEILING DIFFUSER ASSEMBLY. LISTED IN UNDERWRITERS OF CANADA LABORATORIES LIST OF EQUIPMENT AND MATERIALS.
- DUCT: STEEL OR FLEXIBLE DUCT CONNECTIONS AS PER FIRE RATED DESIGN REQUIREMENTS.
- INSTALLATION INSTRUCTIONS: SEE SUBMITTAL 228791
- FIRE RATED DIFFUSERS ARE TO BE INSTALLED IN FIRE RATED T–BAR APPLICATIONS ONLY.

FINISH:

☐ B12 WHITE
(OPTIONAL FINISHES AVAILABLE)

MATERIAL:

☐ PDDR – STEEL CONSTRUCTION

OPTIONS:

☐ ADJUSTABLE VOLUME CONTROLLER (ALLEN KEY ADJUSTABLE)
☐ 165°F (74°C) FUSIBLE LINK (STANDARD)
☐ 212°F (100°C) FUSIBLE LINK

CLASSIFIED c UL us

ALL METRIC DIMENSIONS ( ) ARE SOFT CONVERTED. IMPERIAL DIMENSIONS ARE CONVERTED TO METRIC AND ROUNDED TO THE NEAREST MILLIMETER.

PROJECT: ODD STOCK		price®	
ENGINEER:		MJ	**PDDR-FR** PLENUM RETURN PERF. FACE DIFFUSER MAXIMUM SQUARE NECK
CUSTOMER:		230757	
SUBMITTAL DATE: 2/3/2021	**SPEC. SYMBOL:** PDDR-FR/I/12/3/24/24	2015/03/31	

© Copyright PRICE INDUSTRIES 2015

REV B

price®

Submittal Sheet

SQ. CONE & PERF. FIRE RATED DIFFUSER INSTALLATION INSTRUCTIONS

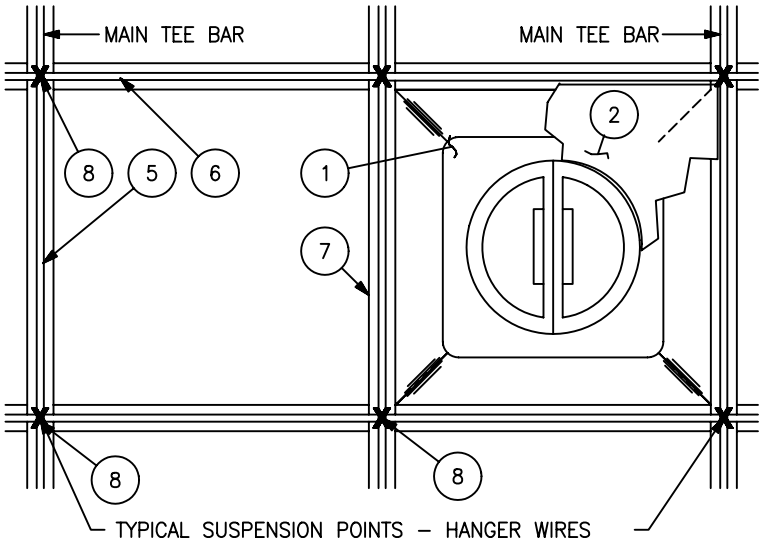

STEP "A" CEILING GRID LAYOUT

NOTE: SECURE FLEXIBLE DUCT WITH APPROVED STEEL CLAMP OR WIRE. DO NOT USE BOLTS, SCREWS OR RIVETS AS THEY COULD INTERFERE WITH DAMPER BLADE OPERATION.

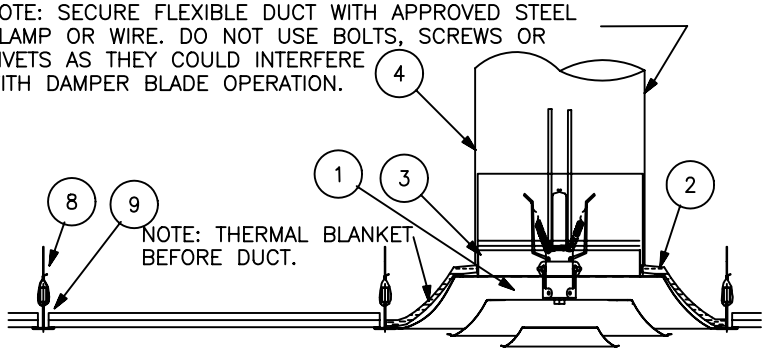

STEP "B" FLEXIBLE DUCT CONNECTION

(CROSS SECTIONAL DETAIL OF DIFFUSER INSTALLATION)

INSTALLATION INSTRUCTIONS

1. FOLLOW STEPS "A" & "B" AS SHOWN.
2. THE FLEXIBLE AIR DUCT SHALL BE CLASS"0" OR CLASS "1" UL CERTIFIED(SEE UL GAS & OIL EQUIPMENT DIRECTORY). THE MAX LENGTH SHALL NOT EXCEED 14'–0"(4267). WHERE FLEX. AIR DUCT SUPPORT IS REQUIRED, USE STEEL STRAPS AND #12 SWG STEEL HANGER WIRE.
3. THE 4'–0" CROSS TEES MUST HAVE SLOTS IN THE WEB FOR CONNECTING THE 2'–0" CROSS TEES. END TABS OF THE 2'–0" CROSS TEE MUST BE BENT BACK AGAINST THE WEB OF THE 4'–0" TEES.
4. SUSPEND CEILING TEES INDEPENDENTLY AT THE 4 CORNERS OF DIFFUSER ASSEMBLY. USE #12 SWG GALVANIZED STEEL HANGER WIRE AND SECURE TO THE FLOOR OR ROOF ABOVE.
5. MAXIMUM ROUND NECK SIZE OF THE FIRE RATED DIFFUSER ASSEMBLY IS 15" (381) DIAMETER.
6. NO DIFFUSER & CEILING RADIATION DAMPER ASSEMBLY SHALL BE LOCATED IN AN ADJACENT 24" X 48" (610 x 1219) CEILING MODULE.
7. INSTALLATION OF 12"X12" (304X304) DIFFUSER ASSEMBLY IS SIMILAR TO THE ABOVE. REWORK TEE BAR AND GRID TO PROVIDE 4– CORNER TEE SUSPENSION OF 12"X12" (304X304) ASSEMBLY. END TABS OF ALL CROSS TEE BARS MUST ENTER SLOTS IN CONNECTING TEES AND MUST BE BENT BACK AGAINST THE WEB OF THE CONNECTING TEES.
8. INSTALLATION OF THERMAL BLANKET ON THE DIFFUSER ASSEMBLY IS DONE AT THE FACTORY. HOWEVER IF IT NEEDS TO BE REMOVED AND REINSTALLED, FIT THE BLANKET OVER THE DIFFUSER NECK BEFORE DUCT IS FASTENED. THERMAL BLANKET MUST TOTALLY COVER THE BACKPAN.

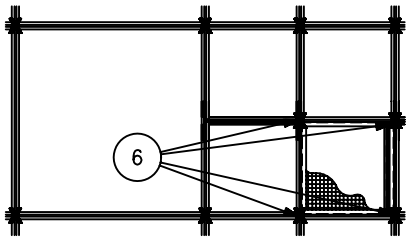

INSTALLATION OF 12" x 12" OR
300mm x 300MM SCD FR

TYPICAL COMPONENTS

BY PRICE INDUSTRIES:

1. SQUARE CONE DIFFUSER C/W CEILING RADIATION DAMPER
2. THERMAL BLANKET CK–2000–B

BY OTHERS:

3. – STEEL (NECK) CLAMP – OR WIRE.
4. – AIR DUCT (FLEXIBLE OR RIDGID)
5. – MAIN TEE RUNNER
6. – CROSS TEE BAR 4'–0" OR 1200mm
7. – CROSS TEE BAR 2'–0" OR 600mm
8. – SUSPENSION HANGER WIRE.
9. – CEILING TILE OR PANEL

ALL METRIC DIMENSIONS ( ) ARE SOFT CONVERTED. IMPERIAL DIMENSIONS ARE CONVERTED TO METRIC AND ROUNDED TO THE NEAREST MILLIMETER.

PROJECT: ODD STOCK		price®	
ENGINEER:			**SQ.CONE & PERF.** DIFFUSER AND CEILING RADIATION DAMPER ASSEMBLY INSTALLATION INSTRUCTIONS
CUSTOMER:		228791	
SUBMITTAL DATE: 2/3/2021	**SPEC. SYMBOL:** PDDR-FR/I/12/3/24/24	APRIL 2002	

© Copyright E.H.PRICE LIMITED 2002

REV B