LEADING EDGE®
A Marley Engineered Products Brand

Heavy Duty Commercial Ceiling Fans

PROJECT

DATE

SHEET OF

ENGINEER

ARCHITECT

CONTRACTOR

SUBMITTED BY

NOTE: All measurements are calculated from ceiling or beam line with "J" hook mounted securely in center of 1½" deep conduit box and downrod supplied on rubber roller (See illustration).

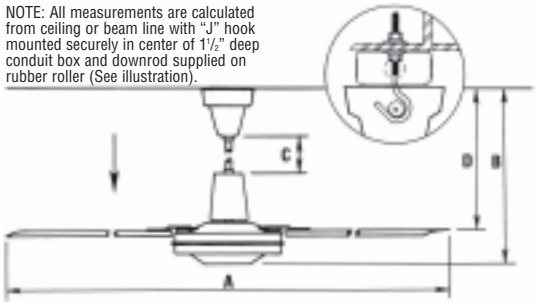

CEILING FAN DIMENSIONS* (mm)

MODEL SERIES	A	B	C	D
		MODELS SUPPLIED WITH 8" & 24" DOWNROD		
36201***	36"	33½"	19"	30½"
48201***	48"	33½"	19"	30½"
56001LC***	56"	33½"	19"	30½"

* Allow for 1/2" variance in "J" hook depth.
*** Note for 8" downrod subtract 13" from measurement scale "C".

Ceiling Fans to be furnished as specified, Leading Edge. Fans to be U.L. listed Standard 507 with matching U.L. listed solid state controls. All motors to be direct-drive permanent split capacitor type, with permanently sealed ball bearings. All motors to have built in, self-resetting (internal) thermal overload protector TI9700.

All fans to have factory installed Secondary Support Cable Assembly connected to motor shaft, with minimum 6 feet galvanized cable ⅛" 7x7 with rated breaking strength of 1700 lbs. and must comply with CSA std. C22.2 Sept. 1986.

Fan blades to be straight with rolled edge design for maximum efficiency. Note: Fans installed with blade height less than 10' from floor must have rolled edge blades minimum ⅜" thick in compliance with U.L. 507.
Fans to be labeled in accordance with U.L. 507 "Mounted blade height to floor of 7 feet acceptable".

Fans used with motor speed controls must be labeled in accordance with U.L. 507 "Suitable for use with solid state motor speed controls".

Model 56001LC is cULus listd

Factory supplied accessories to include:
- A) Solid state motor speed controls (U.L. listed)
- B) Special length downrods
- C) Totally enclosed impact resistant fan guard
- D) Tilted canopy cover
- E) Outdoor location installation kit

SCHEDULE

ITEM	QTY.	MARK	MODEL NUMBER	BLADE SWEEP	CFM	AREA COVERAGE	RPM	VOLTS	AMPS	ACCESSORIES	REMARKS

Heavy Duty Commercial Ceiling Fans

LEADING EDGE®
A Marley Engineered Products Brand

NOTE: All measurements are calculated from ceiling or beam line with "J" hook mounted securely in center of 1½" deep conduit box and downrod supplied on rubber roller (See illustration).

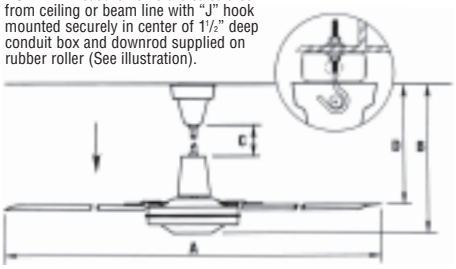

HEAVY DUTY COMMERCIAL MODELS

MODEL NUMBER	BLADE SWEEP	COLOR	VOLTS	CYCLE	FULL LOAD AMPS	FULL LOAD WATTS	RPM	MAX CFM†	AREA COVERAGE PER FAN††	WEIGHT
36201	36"	WHT	120	50/60	.65	75	395	12,500	1600 sq.ft.	20 lbs
48201	48"	WHT	120	50/60	.85	86	315	21,000	2025 sq.ft.	22 lbs
56001LC	56"	WHT	120	50/60	1.0	110	265	25,500	3025 sq.ft.	24 lbs

ACCESSORIES & MISCELLANEOUS ITEMS

MODEL NUMBER	ITEM
28001	FAN GUARD 62" DIAMETER FOR 56" FANS ◆
28002	FAN GUARD 52" DIAMETER FOR COMMERCIAL 36" AND 48" FAN ONLY ◆
99994	TILTED CANOPY COVER
99990	DOWNRODS - 8", 12", 24", 30", 36", 48" (FOR LONGER SIZES - CONSULT FACTORY)

Fan Guards ship via UPS ◆

Custom models available. Consult with factory for information and specifications.

OPTIONAL SOLID STATE MOTOR SPEED CONTROLS

MODEL NUMBER	VOLTS	AMPS	CONTROLS 36"/120 3620-1 UNITS	CONTROLS 48"/120 4820-1 UNITS	CONTROLS 56"/120 56001LC UNITS
12003	120	3	3	2	2
12006	120	6	7	5	5
12008	120	8	10	6	6
12012	120	12	12	10	10

NOISELESS MECHANICAL CONTROL

12001N	120	1	1	1	For use with 48" and 56" models only.
12005N	120	5	2	2	

3 YEAR WARRANTY REGISTRATION AGAINST MANUFACTURERS DEFECTS IS INCLUDED WITH EACH FAN.
† Effective amount of air volume moved past a plane 20ft. from fan, industry test. All specifications subject to change and improvement.
†† Area coverage rated for heat destratification at 20' blade mounting height.